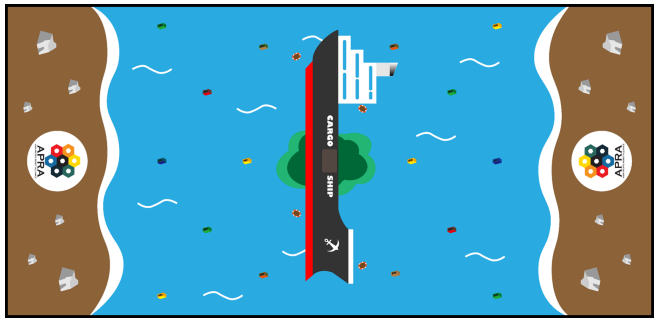

SAM Labs Marine Rescue Mission
Primary Category
Game Description, Rules and Scoring

Updated: 05/06/2023

APRA
ASIA PACIFIC ROBOT ALLIANCE

Asia Pacific Robot Alliance and APRA logo are trademarks of Asia Pacific Robot Alliance ©2023

Content

A. Brief
B. Field Setup And Specifications
C. Game Description
D. Scoring
E. Game Rules
F. Other Rules
G. Assembly Of Game Objects

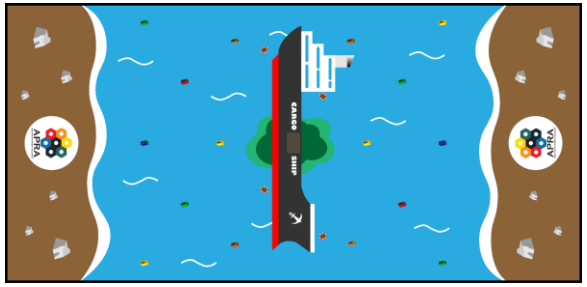

Marine Rescue field

SAM Labs Marine Rescue Mission
Primary Category
Game Description, Rules and Scoring

A. Brief

A container ship capsized at sea in a storm, and the crew jumped into lifeboats and waited for rescue at sea. Not only did the cargo on the ship fall into the sea, but the fuel oil also polluted the ocean due to leakage. Rescue robots are on the way! Robots need to safely send lifeboats and cargo to land, and they need to push the switch on the ship to stop the fuel that continues to pollute the ocean.

A1. The participating teams consist of one to three members, and each team will use one SAM Labs robot to compete against another team's robot. The team with the higher score within the time limit is the winner.

A2. The quota for each school or organization will be determined according to the actual number of participating teams.

A3. Participating age: Participants must be 6-10 years old (birth date in 2023 season is 2013-2017).

Asia Pacific Robot Alliance and APRA logo are trademarks of Asia Pacific Robot Alliance ©2023

B. Field Setup And Specifications

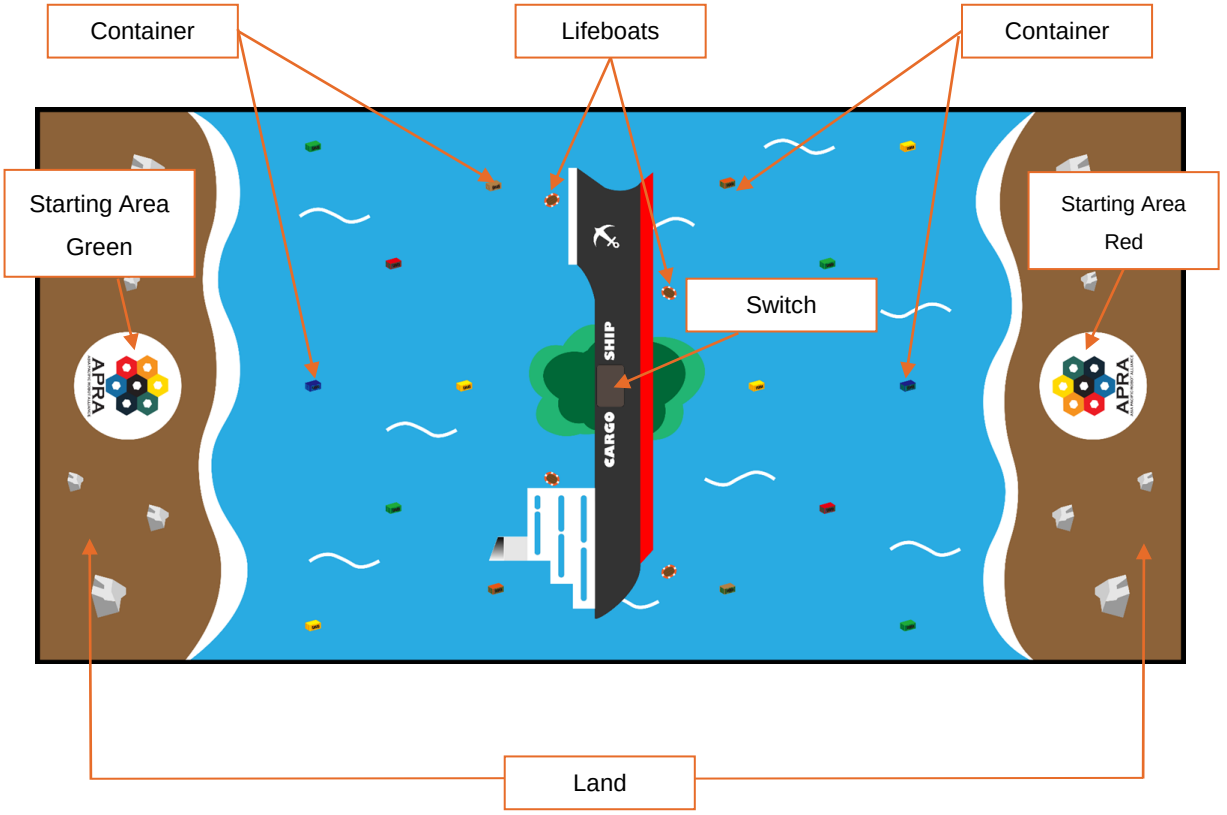

SAM Labs Marine Rescue Mission
Primary Category
Game Description, Rules and Scoring

Asia Pacific Robot Alliance and APRA logo are trademarks of Asia Pacific Robot Alliance ©2023

B. Field Setup And Specifications

B1. White container will be placed on the container diagram of the field.

B2. Red lifeboat will be placed on the lifeboat diagram (Green switch side) of the field.

B3. Green lifeboat will be placed on the lifeboat diagram (Red switch side) of the field.

B4. Switch will be placed on the switch diagram of the field.

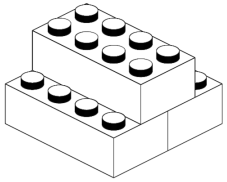

White container

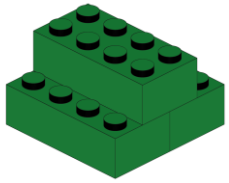

Green lifeboat

SAM Labs Marine Rescue Mission
Primary Category
Game Description, Rules and Scoring

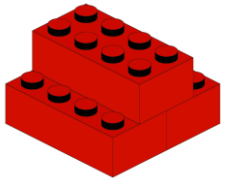

Red lifeboat

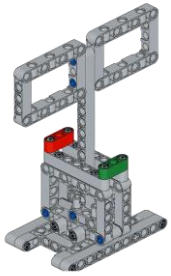

Switch

Asia Pacific Robot Alliance and APRA logo are trademarks of Asia Pacific Robot Alliance ©2023

SAM Labs Marine Rescue Mission
Primary Category
Game Description, Rules and Scoring

C. Game Description

C1. Each round lasts 60 seconds.

C2. The vertical projection of the robot must be completely within the starting area before the game start.

C3. During the game time, robots can move freely on the field (except the opponent's land).

C4. Participants can touch the robot whenever the vertical projection of the robot overlaps with its own land.

C5. Every time the robot returns to land, it must start again from the starting area (only the vertical projection of the robot needs to overlap with the starting area).

C6. Each team will compete with different teams for several rounds, and the team with the higher score at the end of each round wins, and the winner gets 1 point for that round.

C7. In the event of the same score that affects promotion, there will be a play-off. (the scoring method remains the same, but it will be completed in the absence of opponents and within 30 seconds.)

Asia Pacific Robot Alliance and APRA logo are trademarks of Asia Pacific Robot Alliance ©2023

SAM Labs Marine Rescue Mission
Primary Category
Game Description, Rules and Scoring

D. Scoring

D1. 10 points each for white containers that go completely into land.

D2. 30 points each for lifeboats of one's own color completely enter the land of one's own side.

D3. 30 points for pushing the switch all the way in the direction of the opponent's field.

D4. After the game time is over, if the robot's vertical projection overlaps with its own land, 10 points will be scored.

D5. If the participant touches the robot whose vertical projection does not overlap with its own land, 10 points will be deducted each time.

D6.If the robot fails to return to land for any reason during the game, the referee will hand over the robot to the participant, but 10 points will be deducted each time.

D7. If the robot's vertical projection overlaps with the opponent's land at any time, 100 points will be deducted.

D8. The maximum deduction is 0 point, and there will be no negative points.

Asia Pacific Robot Alliance and APRA logo are trademarks of Asia Pacific Robot Alliance ©2023

D. Scoring

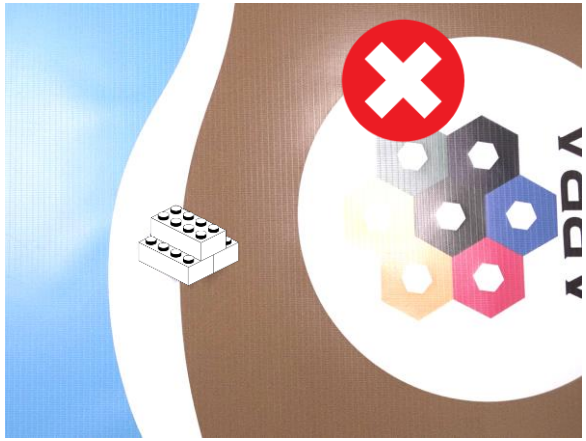

Container or lifeboat partly into land = 0 point

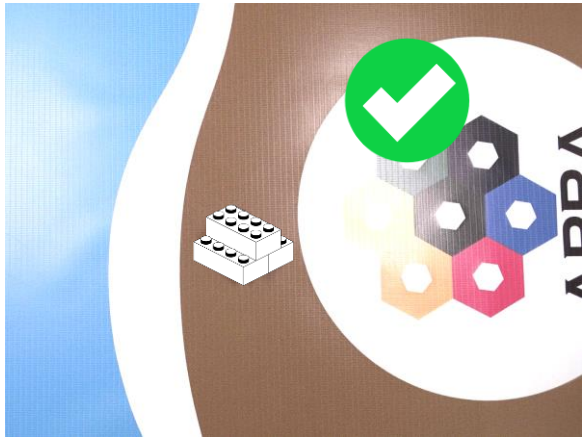

Container fully into land = 10 points
Lifeboat fully into land = 30 points

SAM Labs Marine Rescue Mission
Primary Category
Game Description, Rules and Scoring

Asia Pacific Robot Alliance and APRA logo are trademarks of Asia Pacific Robot Alliance ©2023

D. Scoring

SAM Labs Marine Rescue Mission
Primary Category
Game Description, Rules and Scoring

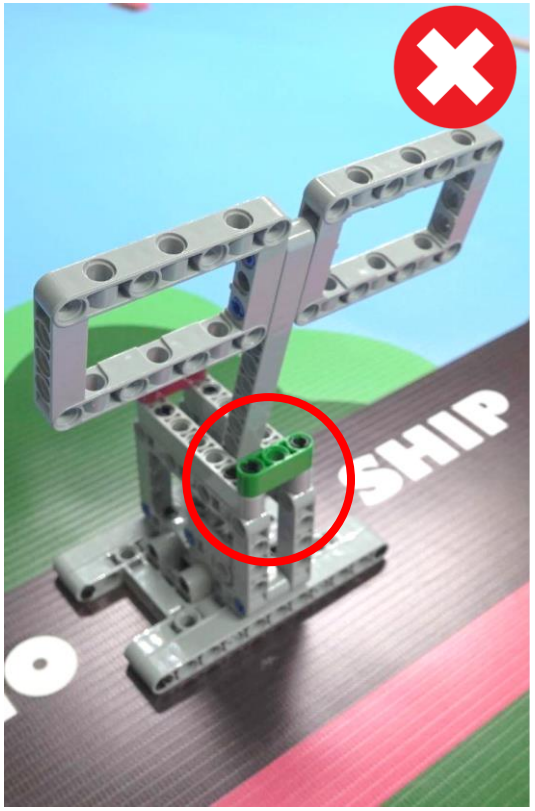

Moveable grey lifarm does not touch the green liftarm = 0 point.

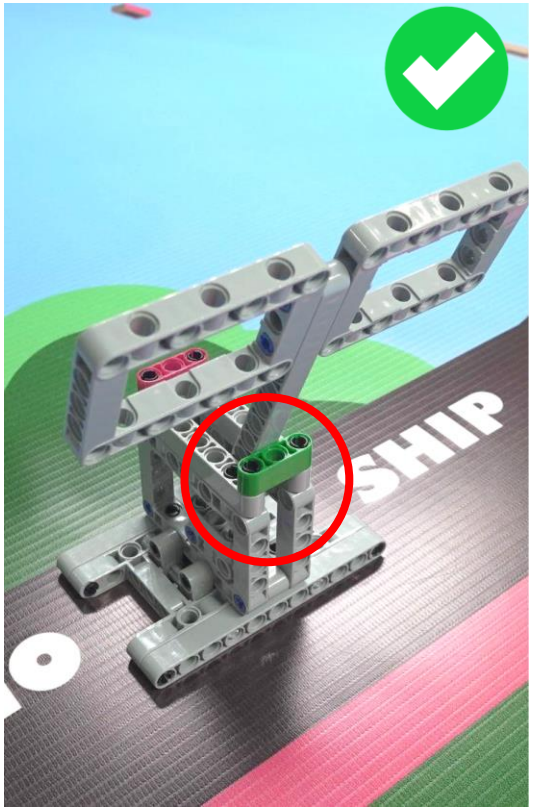

Moveable grey lifarm touches the green liftarm = 30 point (green team)

Asia Pacific Robot Alliance and APRA logo are trademarks of Asia Pacific Robot Alliance ©2023

D. Scoring

SAM Labs Marine Rescue Mission
Primary Category
Game Description, Rules and Scoring

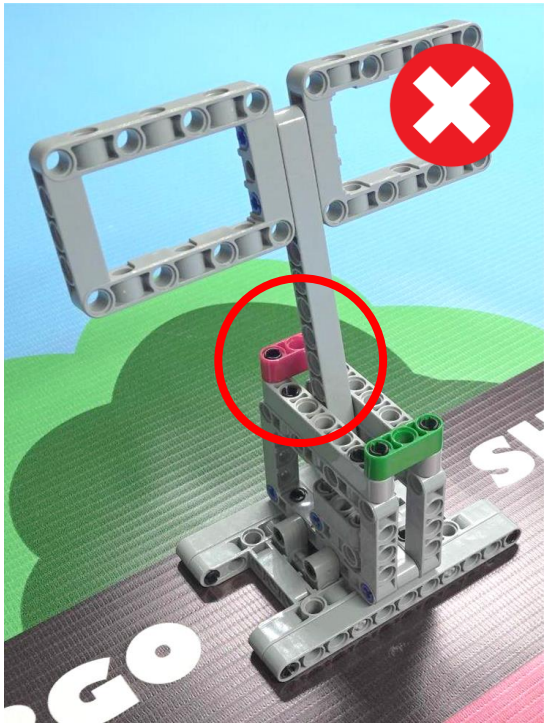

Moveable grey lifarm does not touch the red liftarm = 0 point.

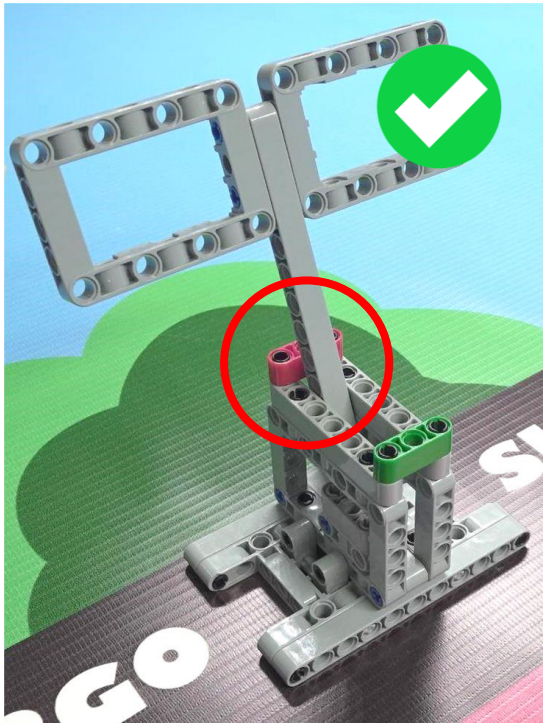

Moveable grey lifarm touches the red liftarm = 30 point (red team).

Asia Pacific Robot Alliance and APRA logo are trademarks of Asia Pacific Robot Alliance ©2023

D. Scoring

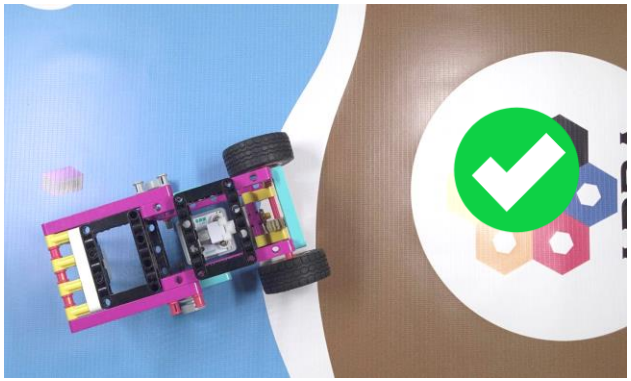

Participants will not be deducted points if they touch the robot.

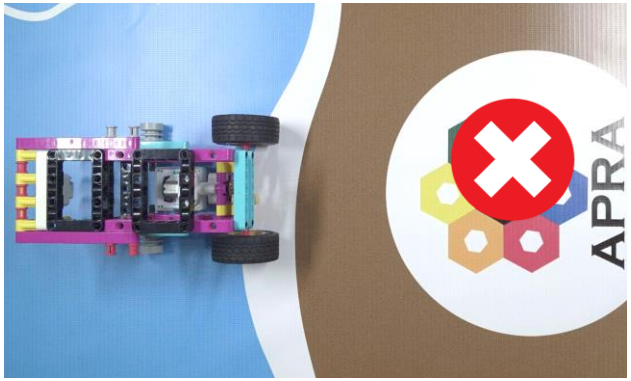

Participants will be deducted 10 points if they touch the robot.

SAM Labs Marine Rescue Mission
Primary Category
Game Description, Rules and Scoring

Asia Pacific Robot Alliance and APRA logo are trademarks of Asia Pacific Robot Alliance ©2023

E. Game Rules

E1. The electronic components (including motors and sensors) used to build the robot must be from SAM Labs products. The number of sensors is not limited.

E2. The maximum extension size of the robot (including the attached accessories) cannot exceed a circle with a diameter of 220mm in length and width, and the height cannot exceed 220mm.

E3. The parts for building the robot must be strictly LEGO® parts.

E4. Only APRA official specified 3D motor connection components can be used.

E5. Other building materials such as glue, tape, screws, etc. must not be used.

E6. The control program must be official SAM Labs software (SAM Studio or SAM Space).

SAM Labs Marine Rescue Mission
Primary Category
Game Description, Rules and Scoring

Asia Pacific Robot Alliance and APRA logo are trademarks of Asia Pacific Robot Alliance ©2023

E. Game Rules

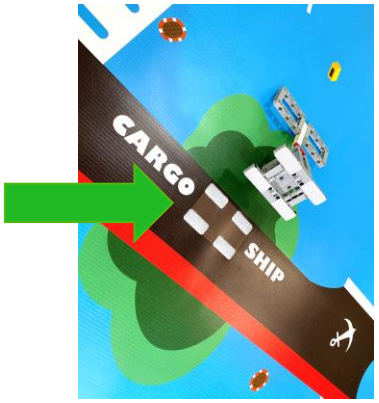

Magic tape areas.

Position of the switch before the game starts.

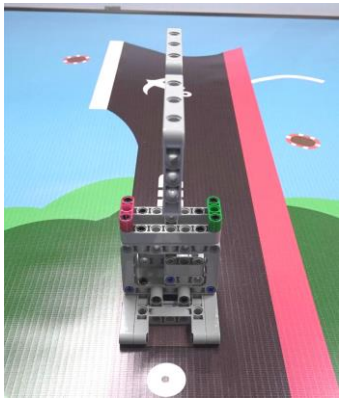

SAM Labs Marine Rescue Mission
Primary Category
Game Description, Rules and Scoring

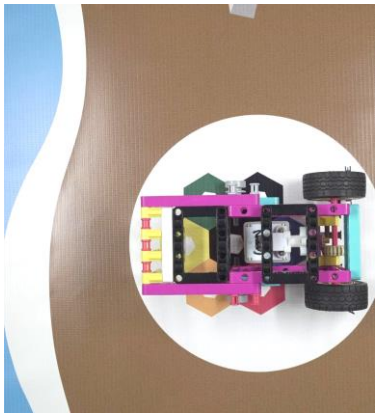

Position of the robot in the starting area before the game starts.

Asia Pacific Robot Alliance and APRA logo are trademarks of Asia Pacific Robot Alliance ©2023

F. Other Rules

Responsibility of the parties

F1. In the tournament, the referee has the final decision.

F2. Any objections to the decision of the referee will be warned. If participant continue to argue, the team will be immediately disqualified from the tournament.

F3. After the game, participants in each team need to sign the score sheet for confirmation.

F4. When confirming the score sheet, a protest can only be lodged if the score is incorrect or if there is a problem with the result of the game. Once the score sheet has been signed, no protest may be made by either party.

F5. The referee may interpret the rules.

F6. In special circumstances, such as unforeseen problems or the ability of robots that everyone agrees in the tournament, the rules can only be changed with the consent of the chief referee.

Inspection of Robot

F7. During the battle, the team can modify the structure of the robot, but the size of the robot must comply with the game rules E2

F8. If the robot is modified during the game, the referee may ask the robot to check again

F9. Any robot that does not comply with inspection regulations, it will not be able to use in the game until it is corrected.

F10. Modifications must be made within the time schedule of the game and teams must not delay game play while making modifications.

F11. If the robot cannot comply with all the regulations (and cannot comply after the amendment), the exiting round will be disqualified.

Asia Pacific Robot Alliance and APRA logo are trademarks of Asia Pacific Robot Alliance ©2023

F. Other Rules

Fair Play

F12. Except for the participants and staff, no one is allowed in the game area.

F13. No one other than the participants is allowed to modify the robot or the program.

F14. Participants are not to be prompted or assisted in any way during the tournament.

F15. If the above situations are found during the game, the team may be disqualified from the tournament.

F16. When the team registers for the tournament, it is also necessary to clearly read the relevant registration terms and competition rules.

F 1 7. When the content of different files conflicts, the order of precedence of the rules is:
Final Decision of Organizer > Rules Update > SAM Labs Marine Rescue Mission.

SAM Labs Marine Rescue Mission
Primary Category
Game Description, Rules and Scoring

Asia Pacific Robot Alliance and APRA logo are trademarks of Asia Pacific Robot Alliance ©2023

G. Assembly Of Game Objects

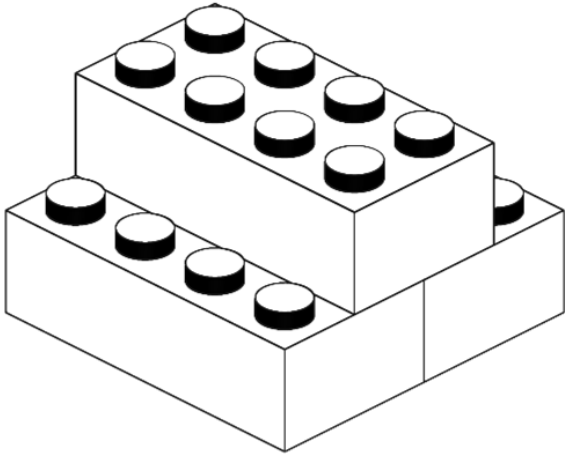

Container

SAM Labs Marine Rescue Mission
Primary Category
Game Description, Rules and Scoring

Asia Pacific Robot Alliance and APRA logo are trademarks of Asia Pacific Robot Alliance ©2023

G. Assembly Of Game Objects

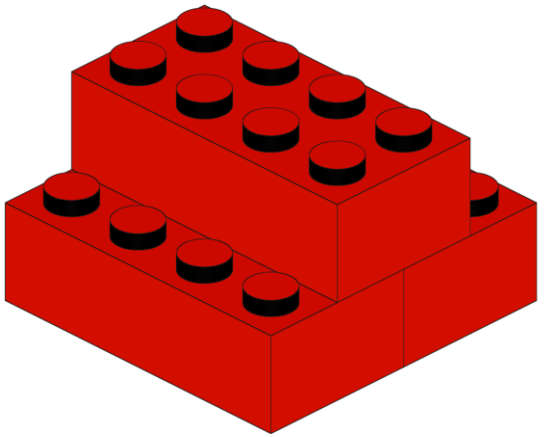

Red lifeboat

SAM Labs Marine Rescue Mission
Primary Category
Game Description, Rules and Scoring

Asia Pacific Robot Alliance and APRA logo are trademarks of Asia Pacific Robot Alliance ©2023

G. Assembly Of Game Objects

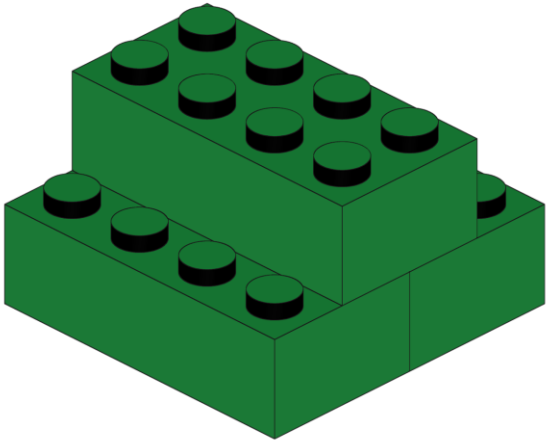

Green lifeboat

SAM Labs Marine Rescue Mission
Primary Category
Game Description, Rules and Scoring

Asia Pacific Robot Alliance and APRA logo are trademarks of Asia Pacific Robot Alliance ©2023

G. Assembly Of Game Objects

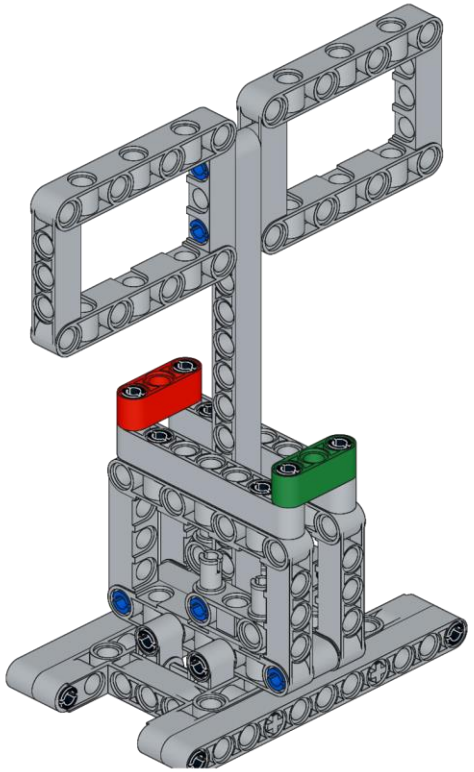

Switch

SAM Labs Marine Rescue Mission
Primary Category
Game Description, Rules and Scoring

Asia Pacific Robot Alliance and APRA logo are trademarks of Asia Pacific Robot Alliance ©2023

1

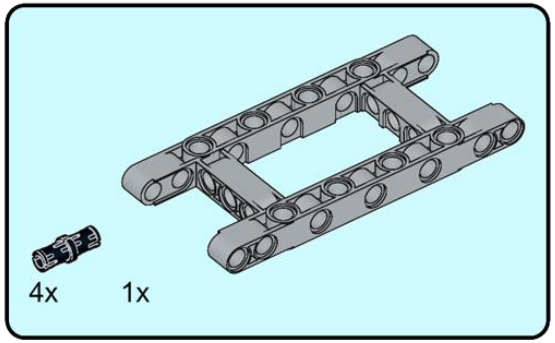

2

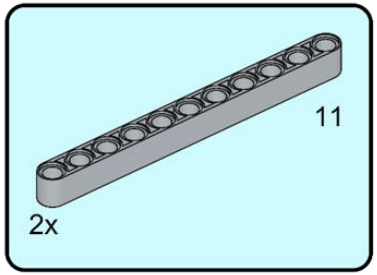

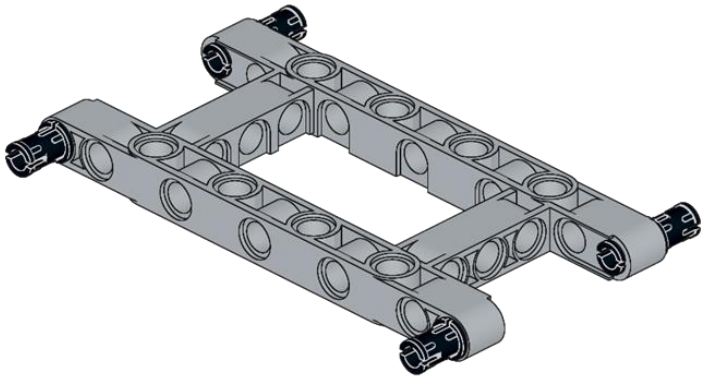

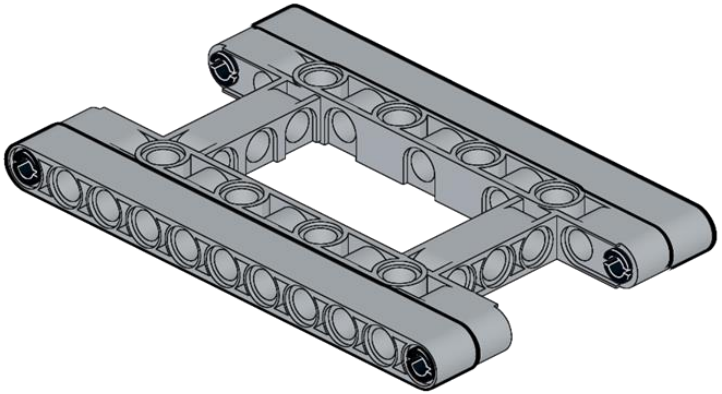

Asia Pacific Robot Alliance and APRA logo are trademarks of Asia Pacific Robot Alliance ©2023

3

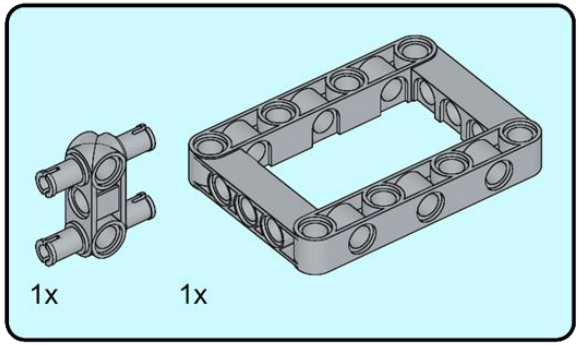

4

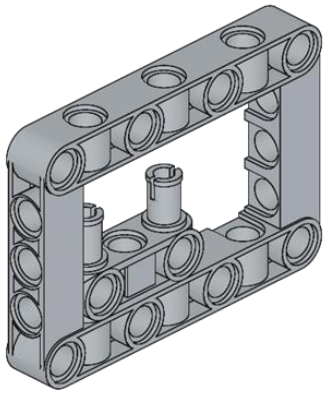

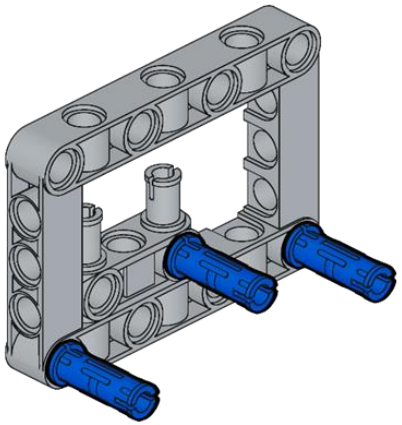

Asia Pacific Robot Alliance and APRA logo are trademarks of Asia Pacific Robot Alliance ©2023

5

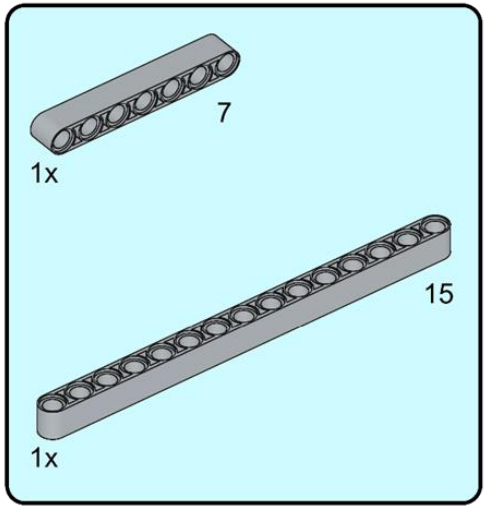

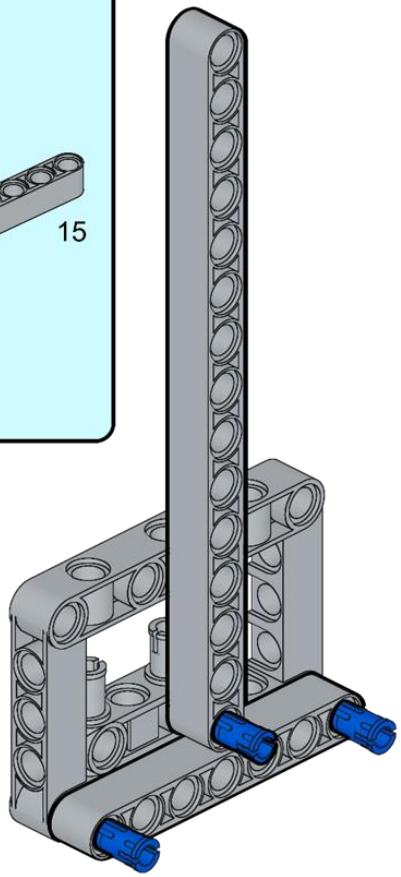

6

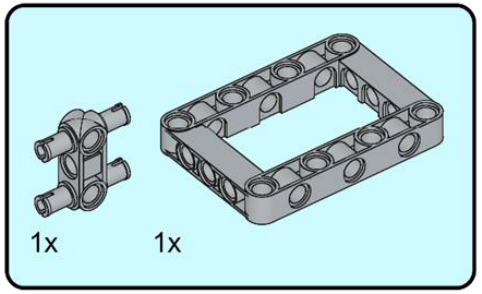

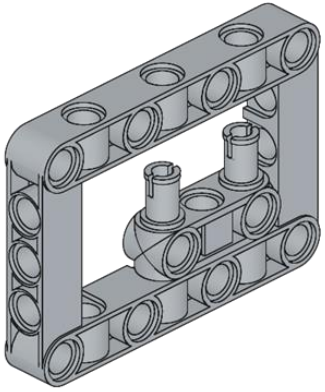

Asia Pacific Robot Alliance and APRA logo are trademarks of Asia Pacific Robot Alliance ©2023

7

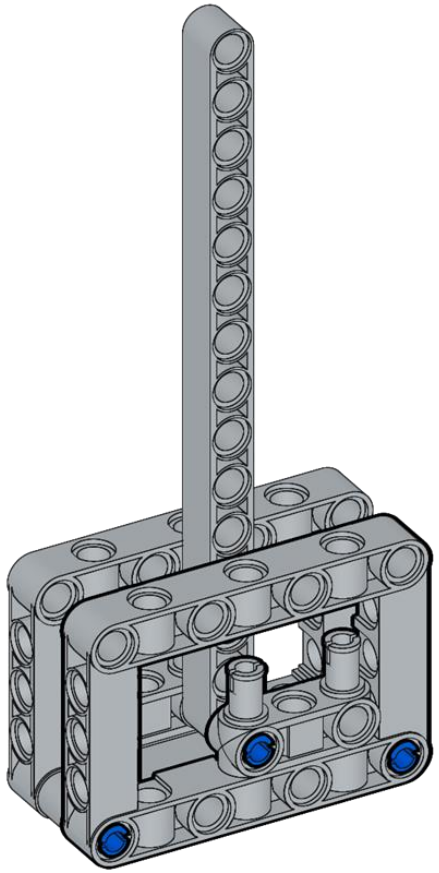

8

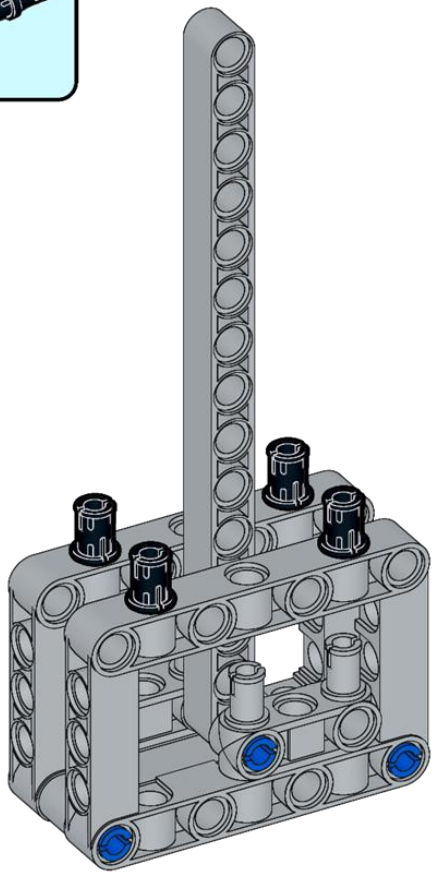

Asia Pacific Robot Alliance and APRA logo are trademarks of Asia Pacific Robot Alliance ©2023

9

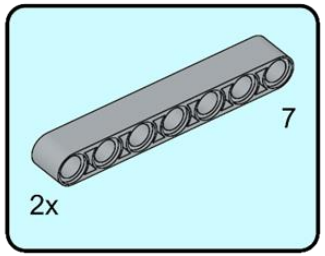

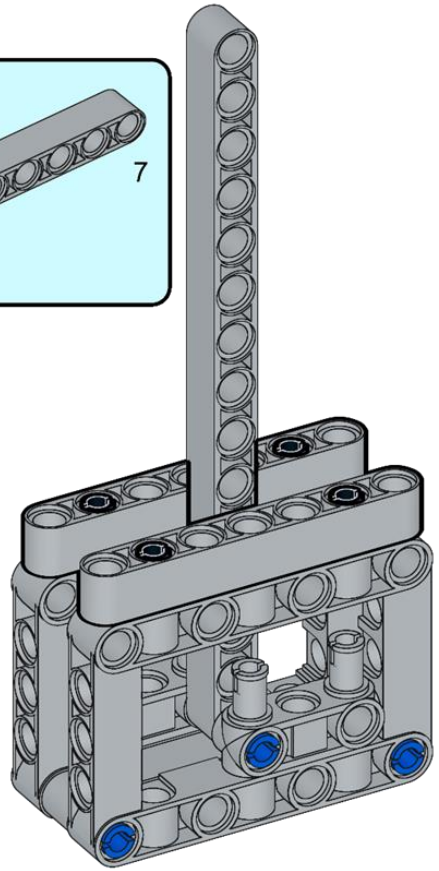

10

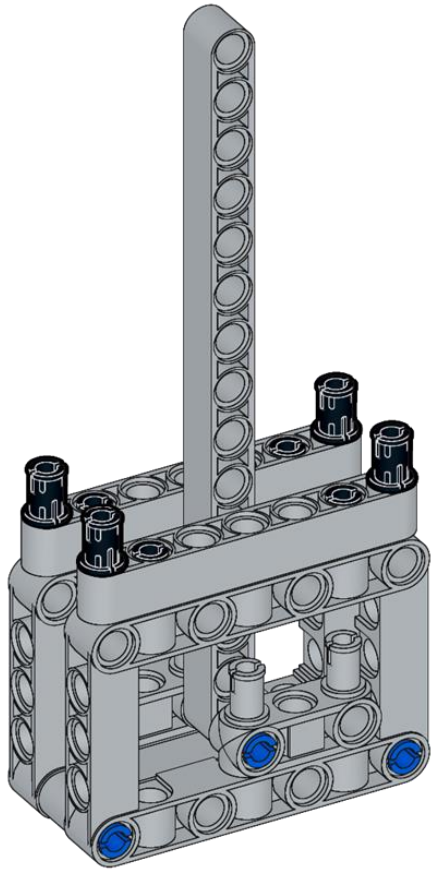

Asia Pacific Robot Alliance and APRA logo are trademarks of Asia Pacific Robot Alliance ©2023

11

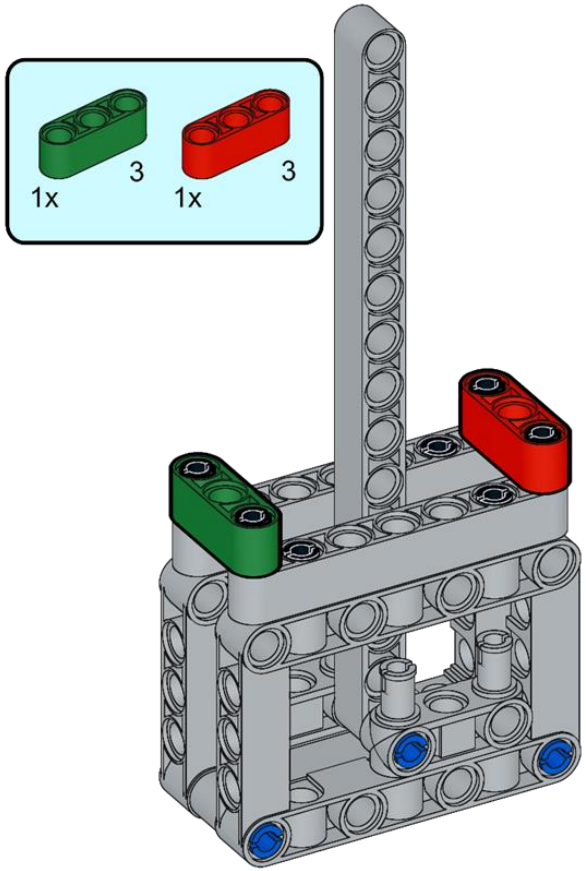

12

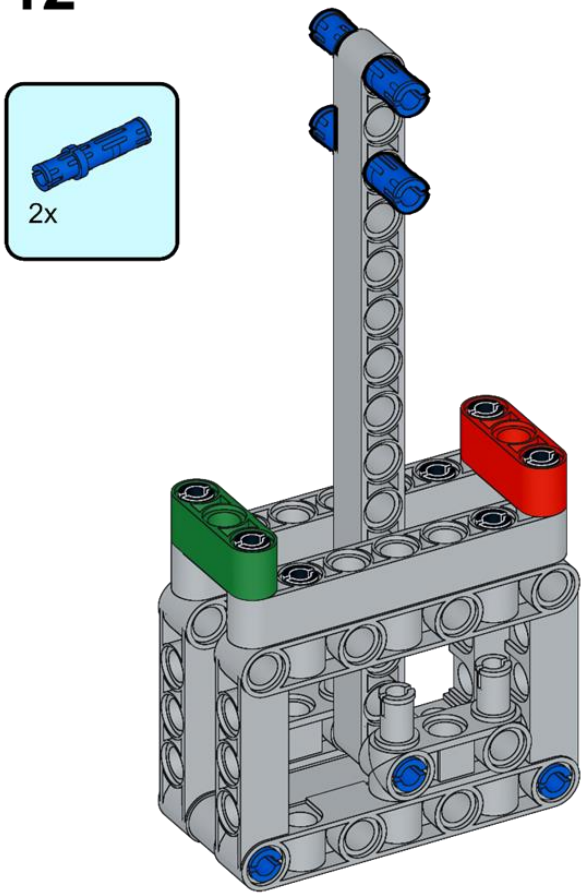

Asia Pacific Robot Alliance and APRA logo are trademarks of Asia Pacific Robot Alliance ©2023

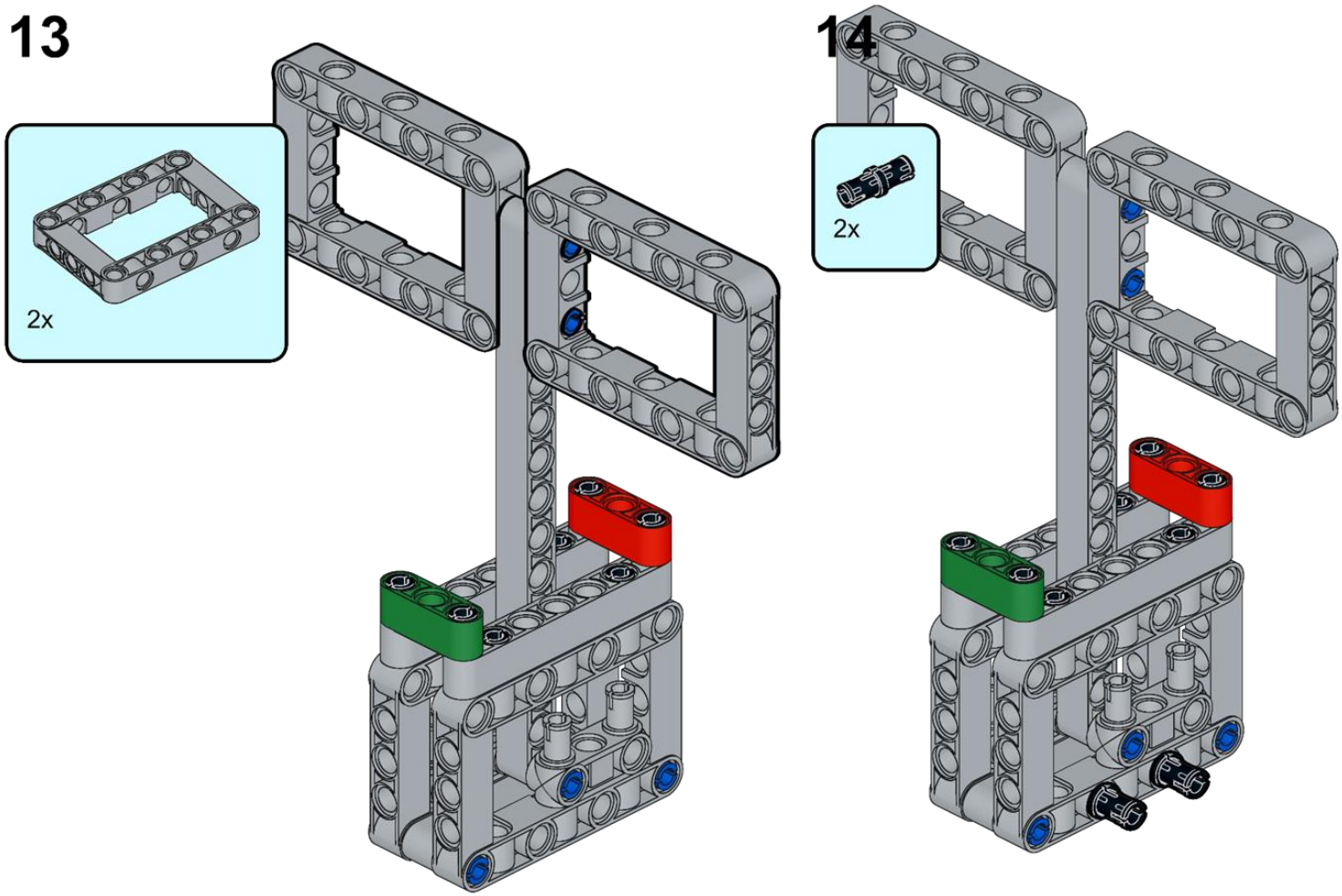

Asia Pacific Robot Alliance and APRA logo are trademarks of Asia Pacific Robot Alliance ©2023

15

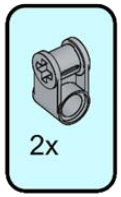

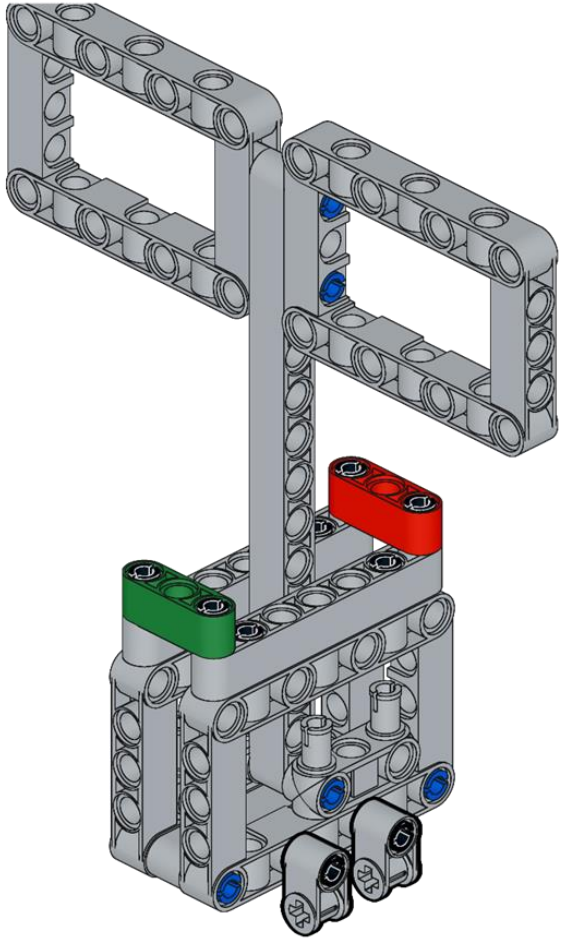

16

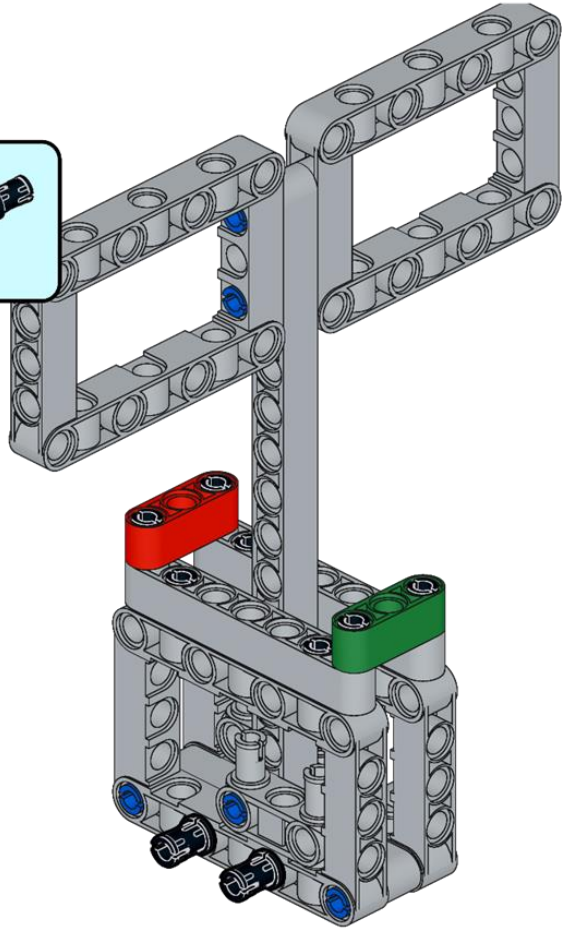

Asia Pacific Robot Alliance and APRA logo are trademarks of Asia Pacific Robot Alliance ©2023

17

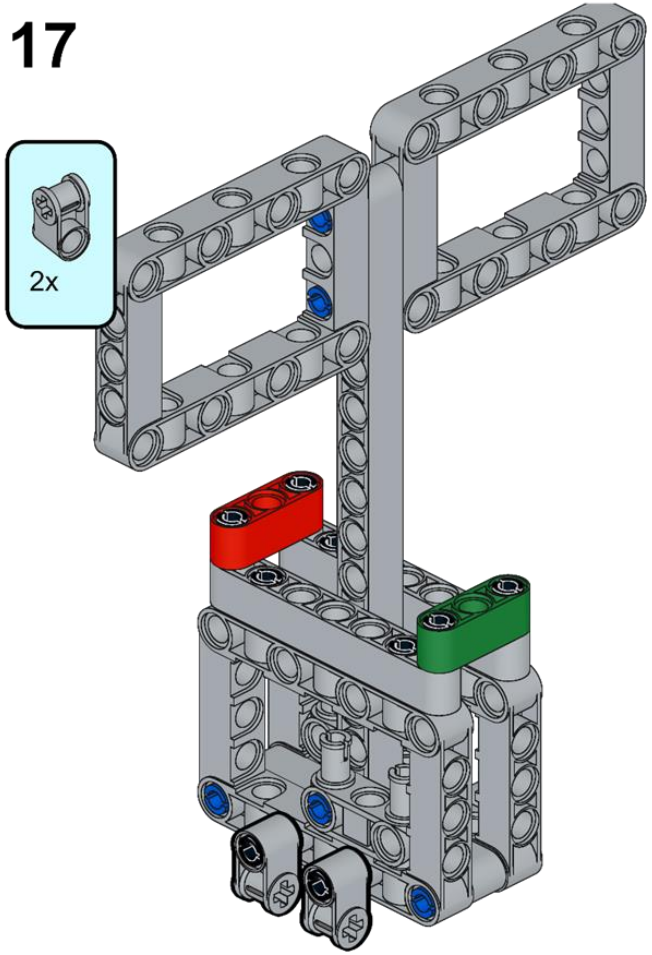

18

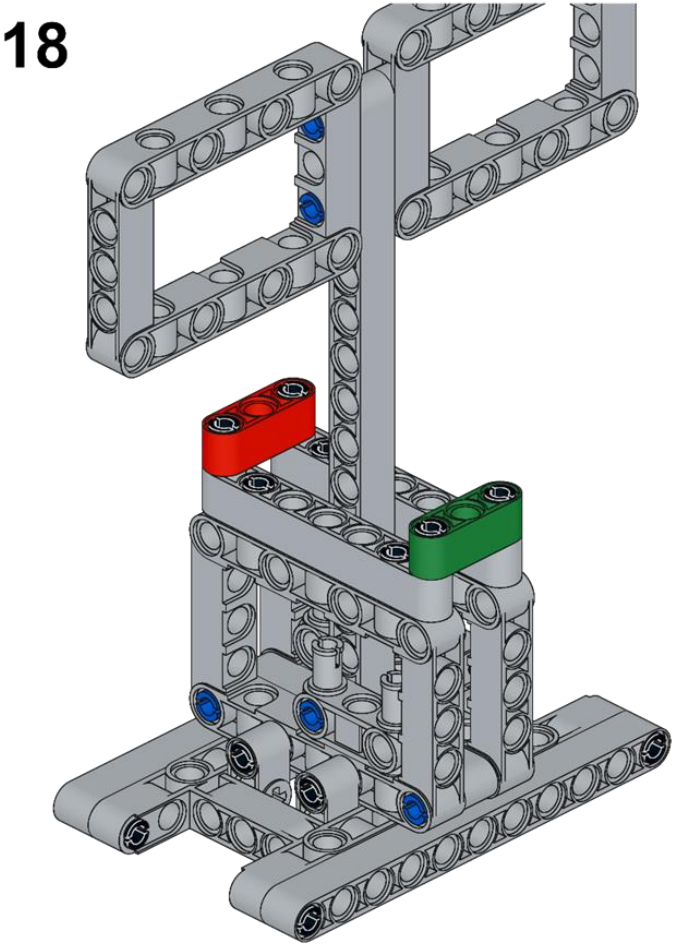

Asia Pacific Robot Alliance and APRA logo are trademarks of Asia Pacific Robot Alliance ©2023

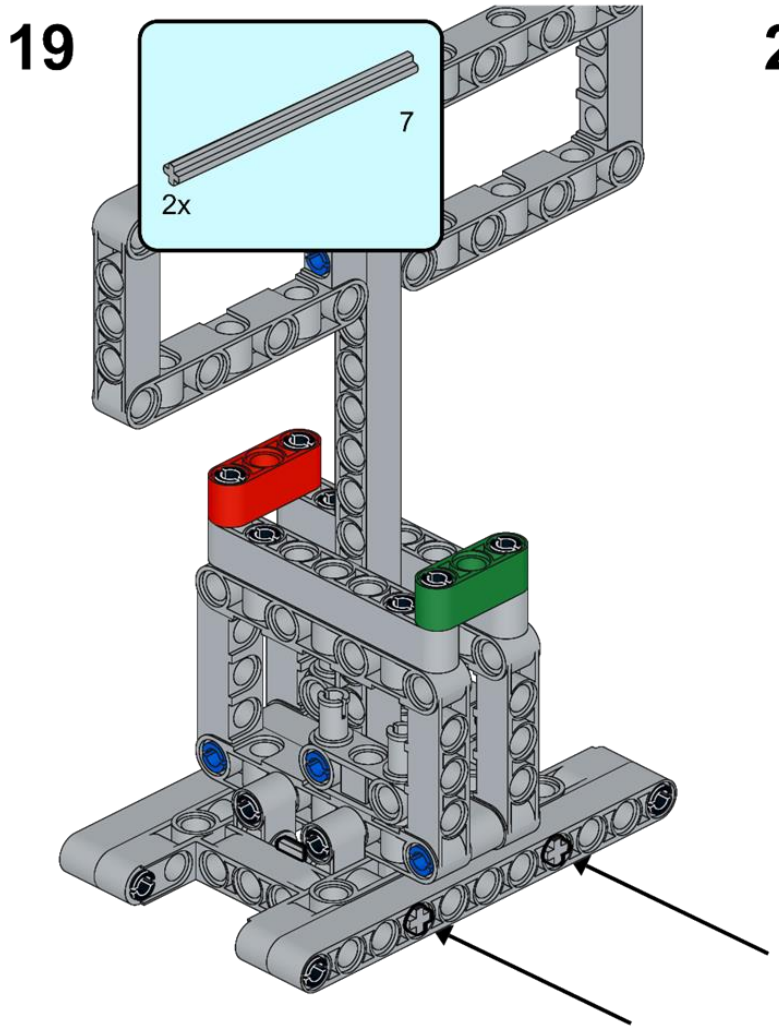

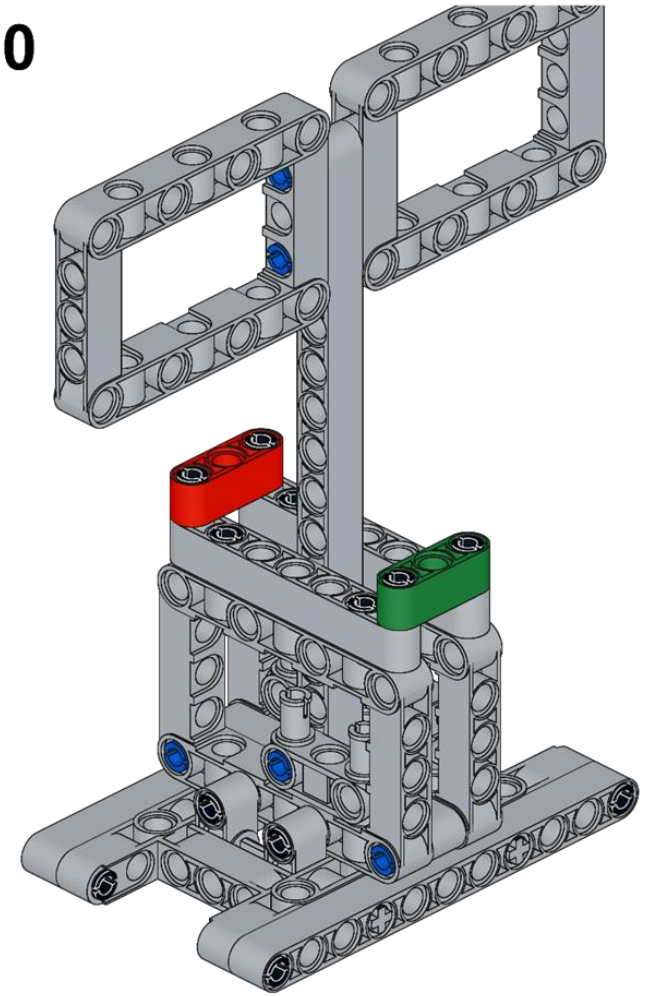

Asia Pacific Robot Alliance and APRA logo are trademarks of Asia Pacific Robot Alliance ©2023